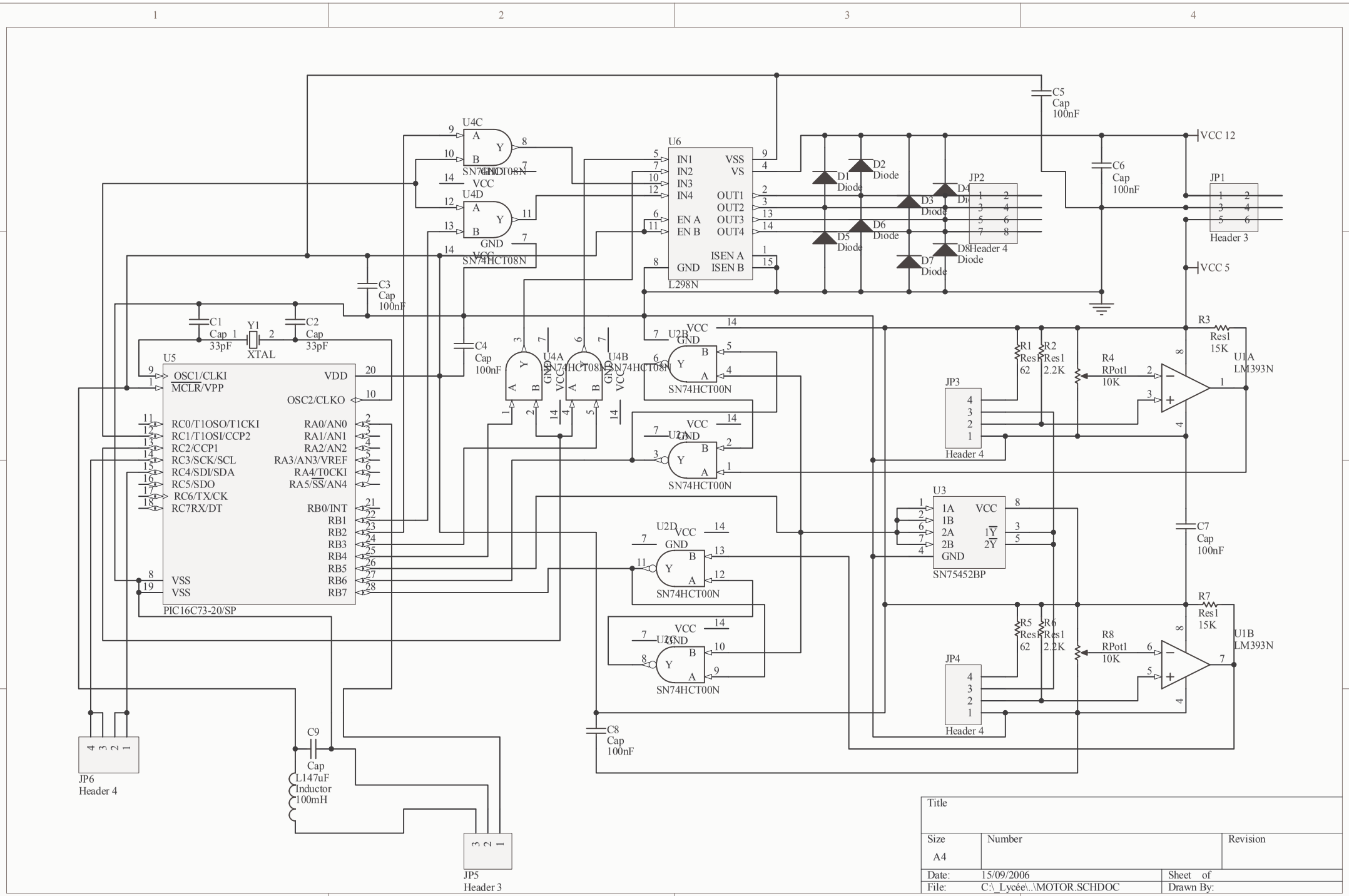
U4C
SN74HCT08N
U4D
SN74HCT08N
U4A
SN74HCT08N
U4B
SN74HCT08N
U6
L298N
IN1
IN2
IN3
IN4
EN A
EN B
GND
VSS
VS
OUT1
OUT2
OUT3
OUT4
ISEN A
ISEN B
D1 Diode
D2 Diode
D3 Diode
D4 Diode
D5 Diode
D6 Diode
D7 Diode
D8 Diode
JP2
Header 4
JP1
Header 3
C5 Cap 100nF
C6 Cap 100nF
VCC 12
VCC 5
C3 Cap 100nF
C4 Cap 100nF
C1 Cap 33pF
C2 Cap 33pF
Y1 XTAL
U5
PIC16C73-20/SP
OSC1/CLKI
MCLR/VPP
VDD
OSC2/CLKO
RC0/T1OSO/T1CKI
RC1/T1OSI/CCP2
RC2/CCP1
RC3/SCK/SCL
RC4/SDI/SDA
RC5/SDO
RC6/TX/CK
RC7RX/DT
RA0/AN0
RA1/AN1
RA2/AN2
RA3/AN3/VREF
RA4/T0CKI
RA5/SS/AN4
RB0/INT
RB1
RB2
RB3
RB4
RB5
RB6
RB7
VSS
VSS
U2B
U2A
U2D
U2C
SN74HCT00N
JP3
Header 4
JP4
Header 4
R1 Res1 62
R2 Res1 2.2K
R4 RPot1 10K
R3 Res1 15K
U1A LM393N
R5 Res1 62
R6 Res1 2.2K
R8 RPot1 10K
R7 Res1 15K
U1B LM393N
U3
SN75452BP
1A
1B
2A
2B
GND
VCC
1Y
2Y
C7 Cap 100nF
C8 Cap 100nF
C9 Cap 100nF
L1 47uF Inductor 100mH
JP6
Header 4
JP5
Header 3
Title
Size
A4
Number
Revision
Date: 15/09/2006
File: C:_Lycée\..\MOTOR.SCHDOC
Sheet of
Drawn By: